SHARPSINKS
A DIVISION OF ESI

18 GAUGE SINK CONSTRUCTION
304 STAINLESS STEEL
FULLY INSULATED SPRAY COATING
SOUND DAMPENING PADS
R20 RADIUS CORNERS

BUILDSHARP
handcrafted

SAP3020-16

16 Gauge Construction
Apron-Handmade
304 Series Stainless Steel
18/8 Chome-Nickel Content
Fully Insulated Spray Coating
Sound Dampening Pads
Satin Finish
ASME 112.19.3-00
IAPMO/UPC Compliant

Includes
Mounting Clips
Paper Template
DXF CAD Files Available

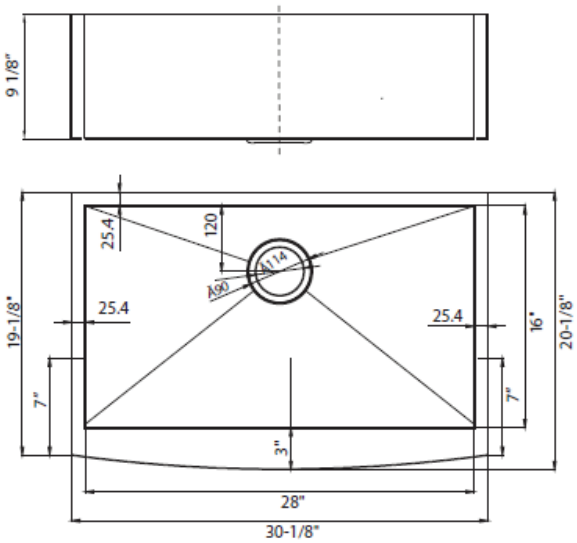

ESI
a J.R. Sharp Company

SHARPSINKS
A DIVISION OF ESI
800-470-5831
www.esi4service.com

DALLAS, TX
DENVER, CO
LOS ANGELES, CA
PHOENIX, AZ

SALT LAKE CITY, UT
SAN FRANCISCO, CA
SEATTLE, WA
ST. LOUIS, MO